DCD790 CORDLESS DRILL 1

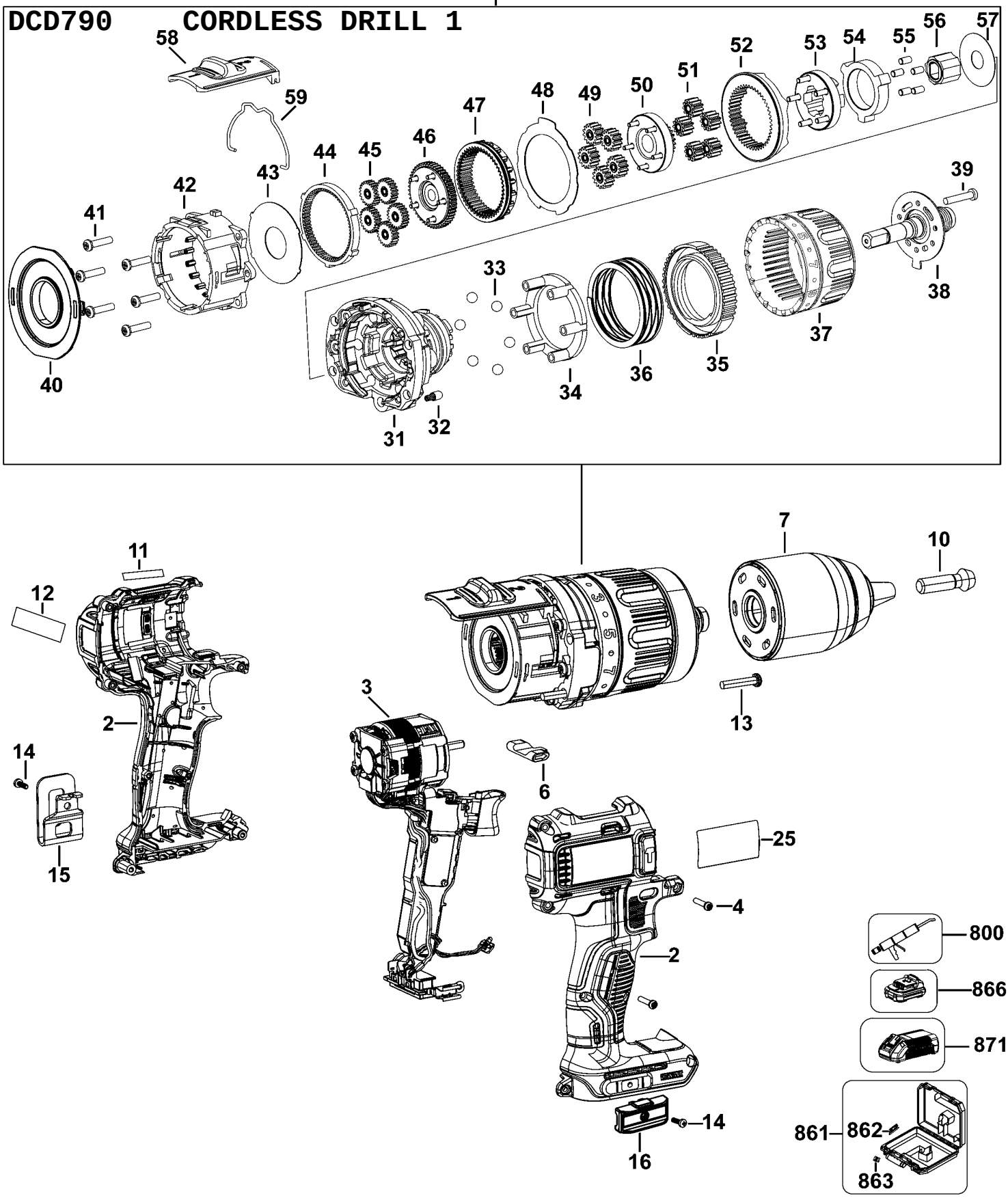

©

Artikeliste for DCD790 CORDLESS DRILL 1

Detalje	Artikelnummer	Antal	Artikelbeskrivelse	Almen beskrivelse	Øvrig information	Reperationsinstruktion	Markeder
1	N287496	1	TRANSMISSION SA			No	
2	N181495	1	CLAMSHELL SET	18V		No	
3	N257100	1	MOTOR & SWITCH SA			No	QW
4	682211-00	7	SCREW			No	
6	N079835	1	ACTUATOR FWD/REV			No	
7	N196034	1	CHUCK KEYLESS			No	
10	N092854	1	SCREW	LH THD 1/4 -28		No	
11	N237999	1	LABEL	18V		No	
12	N298039	1	LABEL			No	
13	N377990	4	SCREW	M3.12 X 16 X T10		No	
14	N042665	2	SCREW	M3 X 10		No	
15	N086039	1	HOOK			No	
16	N095778	1	HOLDER BIT			No	
25	N218572	1	RATING PLATE	EURO		No	QW
31	N299702	1	GEARCASE SA			No	
32	326467-00	1	DETENT			No	
33	386690-00	6	BALL			No	
34	N036370	1	RING			No	
35	N036372	1	ADJUSTER TORQUE			No	
36	N077956	1	SPRING			No	
37	N181496	1	COLLAR			No	
38	N110038	1	SPINDLE SA			No	
39	N039795	6	SCREW			No	
40	N148081	1	ADAPTOR			No	
41	N075506	6	SCREW	M3.12 X 13		No	
42	N033869	1	GEARCASE			No	
43	N063567	1	PLATE			No	
44	N030988	1	GEAR		1ST RED	No	
45	N030999	5	GEAR	1ST RED		No	
46	N124371	1	CARRIER SA	1ST RED		No	
47	N031079	1	GEAR	2ND RED		No	
48	N032409	1	WASHER			No	
49	N031080	5	GEAR	2ND RED		No	

Artikeliste for DCD790 CORDLESS DRILL 1

Detalje	Artikelnummer	Antal	Artikelbeskrivelse	Almen beskrivelse	Øvrig information	Reperationsinstruktion	Markeder
50	N122400	1	CARRIER SA			No	
51	N031083	5	GEAR	3RD RED		No	
52	N078410	1	GEAR	3RD		No	
53	N122401	1	CARRIER SA			No	
54	N022985	1	LOCKING RING			No	
55	N093416	5	ROLLER			No	
56	N157720	1	ANVIL ASSEMBLY			No	
56	N157720	1	ANVIL ASSEMBLY			No	
57	N090435	1	WASHER			No	
58	N035051	1	SELECTOR SA			No	
59	N035441	1	WIRE STEEL			No	
800	808386-00	1	GREASE 100 GMS	Molykote G-68		No	
861	N312361	1	KITBOX	D2 - T-STAK	DCD790D2	No	QW
861	N312360	1	KITBOX	P2/M2 - T-STAK	DCD790P2-DCD790M2	No	QW
861	N197072	1	KITBOX			No	QW
862	H1500082520	2	LATCH			No	
863	P910190	2	LATCH			No	
866	N195933	1	BATTERY 18V - 4.0AH - 72WH	Li-Ion - DCB182	DCD790M2	No	QW
866	N394624	1	BATTERY 18V - 5.0AH - 90WH	DCB184-XJ LI-ION	DCD790P2	No	QW
866	N314783	1	BATTERY 18V - 2.0AH - 36WH	Li-Ion - DCB183-XJ	DCD790D2	No	QW
871	N120346	1	CHARGER 10.8V - 18V	DCB105-QW		No	QW